	PART DESCRIPTION	MATERIAL	QTY
		Paint	
1	TRAY	ABS, BASF GP-22, UL HB	1
		MUSASHI, FA-YA353P-YI: Black RAL9011	
2	TRAY_INSERT	Stainless steel : SUS304, T=0.5mm	1
		BAOWANG, AC-NYQ5352: Metalic silver gray	
3	FLANNEL_BTM_TRAY	Black Flannel	1
		N/A	
4	TRAY_BASE	Stainless steel : SUS304, T=0.5mm	1
		BAOWANG, AC-NYQ5352: Metalic silver gray	

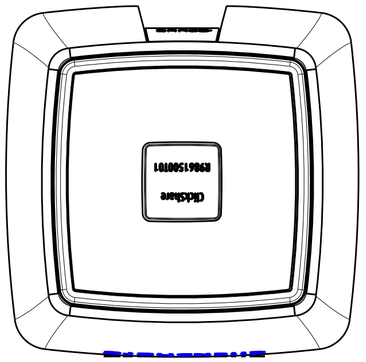

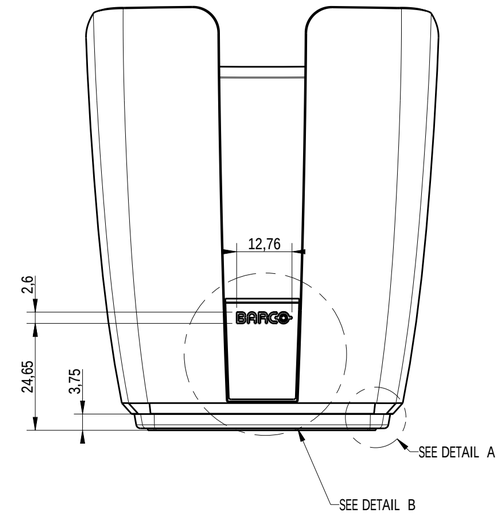

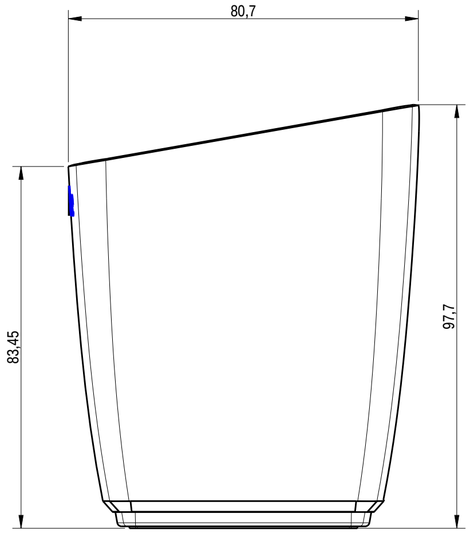

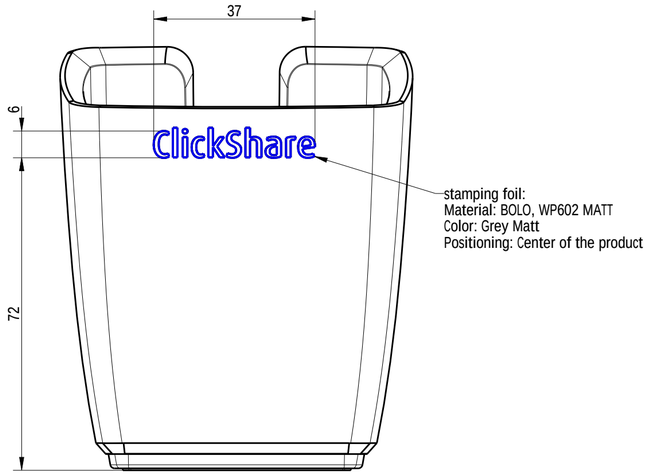

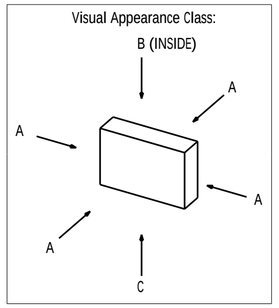

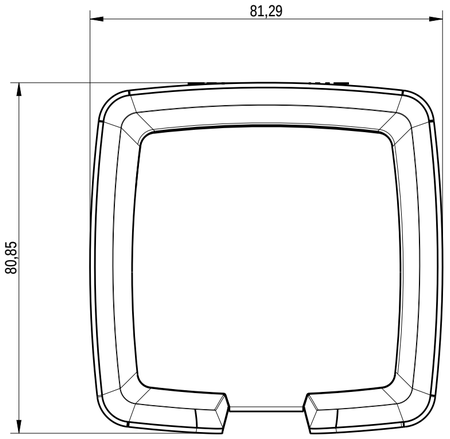

SCALE 67/100

SCALE 67/100

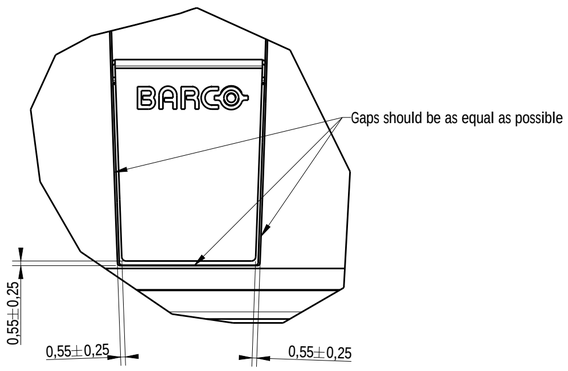

DETAIL B
SCALE 2/1

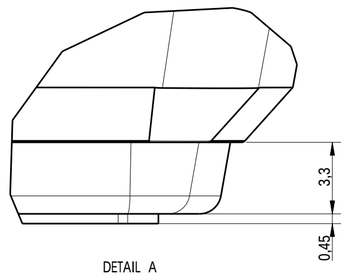

DETAIL A
SCALE 5/1

GENERIC	QAM001/000
- Part shall be clean and free of all burrs and sharp edges according to ISO 13715	GD&T according to ISO2768-K

Linear tol (mm) according to table (except where stated)

0 6	>6 30	>30 600	>600 1000	>1000	HOLE ∅ ISO 286 H13
±0.1	±0.2	±0.4	±0.8	±1.2	

ASSEMBLIES	QAM001/090
MECHANICAL FIXATIONS: ALL SCREWS: TABLE 1 QAM001/090, except where indicated	

NAME	REV	ECN	DATE	DESCRIPTION MODIFICATION CURRENT REVISION

DESIGNER	BEBU	06/10/2015	MATERIAL	N/A
APPROVED	CDSP	06/10/2015	0,223 kg	

PROJ. 1ST ANG	1/1	A2	VISUAL APPEARANCE CLASS	A
MM	SCALE	SHEET 1 OF 1	BARCO QUALITY STANDARD QAM 001	

ALL RIGHTS STRICTLY RESERVED. REPRODUCTION OR ISSUE TO THIRD PARTIES IN ANY FORM WHATSEVER, IS NOT PERMITTED WITHOUT WRITTEN AUTHORITY FROM BARCO

This drawing shall be used in combination with the CAD file for full product definition
All undimensioned nominal geometry: see CAD file of same revision
In case of conflict, drawing dimensions overrule CAD dimensions
See additional info on the drawing for applicable CAD file GD&T references and tolerances

BARCO

CLICKSHARE TRAY	R9861500T01	00