INSTALLATION INSTRUCTIONS

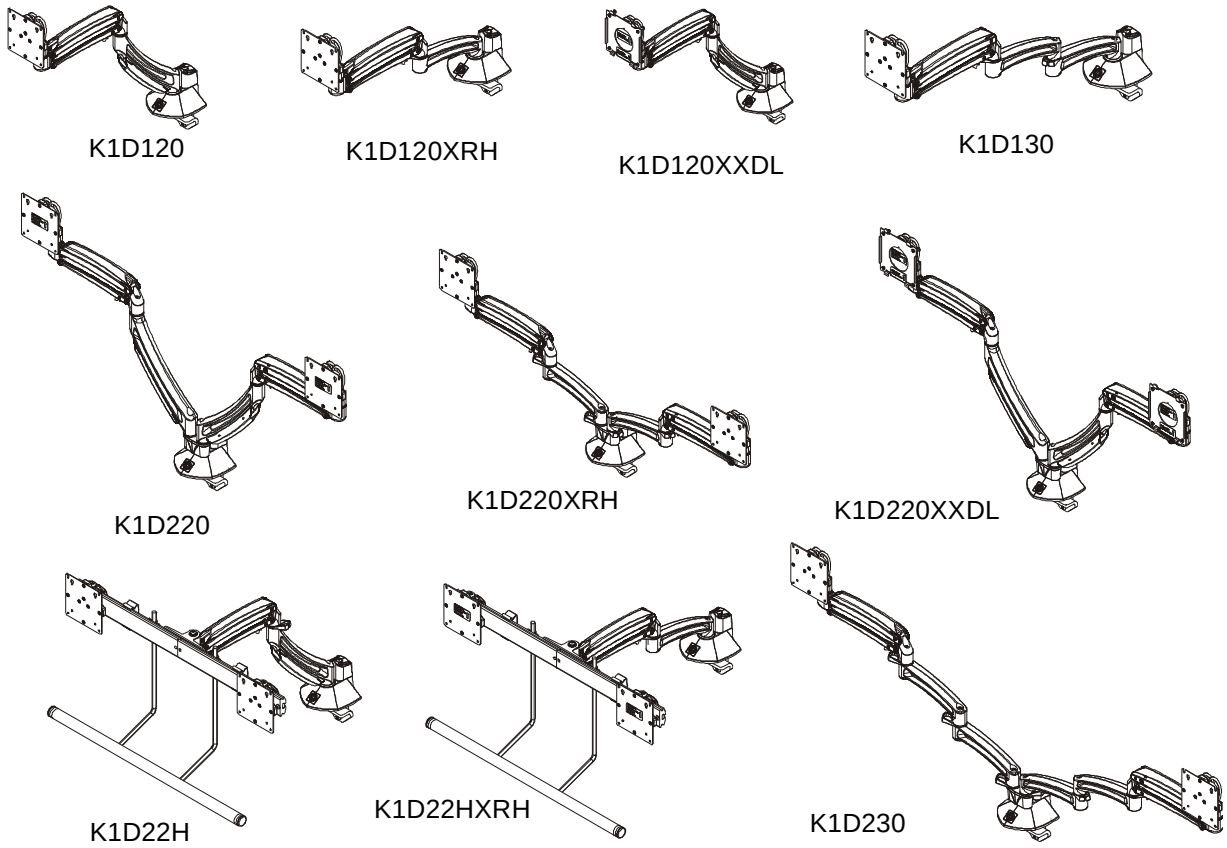

K1 Desk Mounts

CHIEF®
Our Mounts. **Your Vision.**

K1D Series

DISCLAIMER

Milestone AV Technologies and its affiliated corporations and subsidiaries (collectively “Milestone”), intend to make this manual accurate and complete. However, Milestone makes no claim that the information contained herein covers all details, conditions or variations, nor does it provide for every possible contingency in connection with the installation or use of this product. The information contained in this document is subject to change without notice or obligation of any kind. Milestone makes no representation of warranty, expressed or implied, regarding the information contained herein. Milestone assumes no responsibility for accuracy, completeness or sufficiency of the information contained in this document.

Chief® is a registered trademark of Milestone AV Technologies. All rights reserved.

DEFINITIONS

MOUNTING SYSTEM: A MOUNTING SYSTEM is the primary Chief product to which an accessory and/or component is attached.

ACCESSORY: AN ACCESSORY is the secondary Chief product which is attached to a primary Chief product, and may have a component attached or setting on it.

COMPONENT: A COMPONENT is an audiovisual item designed to be attached or resting on an accessory or mounting system such as a video camera, CPU, screen, display, projector, etc.

WARNING: A WARNING alerts you to the possibility of serious injury or death if you do not follow the instructions.

CAUTION: A CAUTION alerts you to the possibility of damage or destruction of equipment if you do not follow the corresponding instructions.

IMPORTANT SAFETY INSTRUCTIONS!

WARNING: Failure to read, thoroughly understand, and follow all instructions can result in serious personal injury, damage to equipment, or voiding of factory warranty! It is the installer’s responsibility to make sure all mounting systems are properly assembled and installed using the instructions provided.

WARNING: Failure to provide adequate structural strength for this mounting system can result in serious personal injury or damage to equipment! It is the installer’s responsibility to make sure the structure to which this mounting system is attached can support five times the combined weight of all equipment. Reinforce the structure as required before installing the mounting system.

WARNING: Use this mounting system only for its intended use as described in these instructions. Do not use attachments not recommended by the manufacturer.

WARNING: Never operate this mounting system if it is damaged. Return the mounting system to a service center for examination and repair.

WARNING: Do not use this product outdoors.

WARNING: Exceeding the weight capacity can result in serious personal injury or damage to equipment! It is the installer’s responsibility to make sure the combined weight of all components and accessories attached to the K1D Series Monitor Arm up to (and including) the display does not exceed the weight limits listed below. Use with products heavier than the maximum weight indicated may result in collapse of the mount and its accessories causing possible injury.

MODEL	Max Weight Allowed for EACH Display	Max Weight Capacity of Mounting System
K1D120	25 lbs (11.34 kg)	25 lbs (11.34 kg)
K1D120XRH	25 lbs (11.34 kg)	25 lbs (11.34 kg)
K1D120XXDL	25 lbs (11.34 kg)	25 lbs (11.34 kg)
K1D130	10 lbs (4.54 kg)	10 lbs (4.54 kg)
K1D220	25 lbs (11.34 kg)	50 lbs (22.68 kg)
K1D220XRH	25 lbs (11.34 kg)	50 lbs (22.68 kg)
K1D220XXDL	25 lbs (11.34 kg)	50 lbs (22.68 kg)
K1D22H	9 lbs (4.08 kg)	18 lbs (8.16 kg)
K1D22HXRH	9 lbs (4.08 kg)	18 lbs (8.16 kg)
K1D230	10 lbs (4.54 kg)	20 lbs (9.07 kg)

--SAVE THESE INSTRUCTIONS!--

DIMENSIONS

K1D120

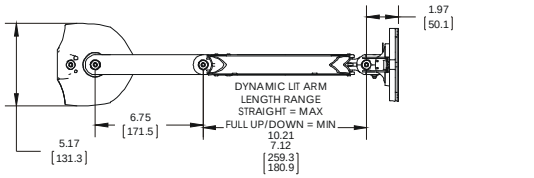

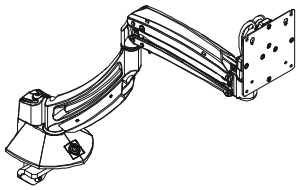

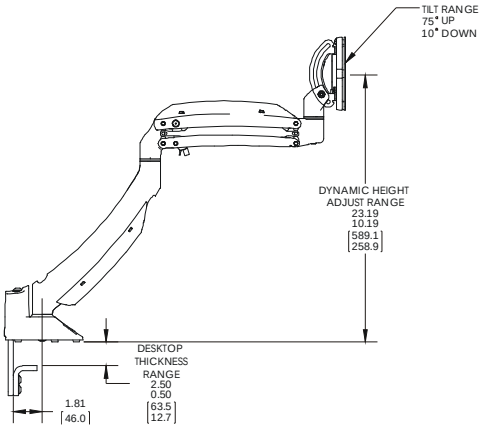

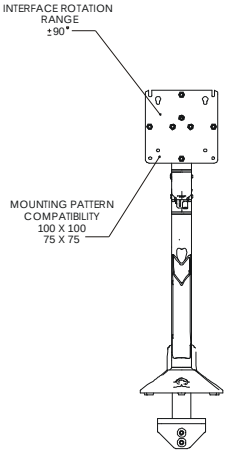

K1D120XRH

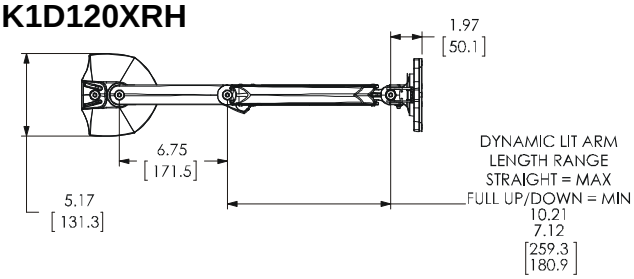

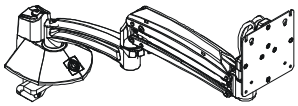

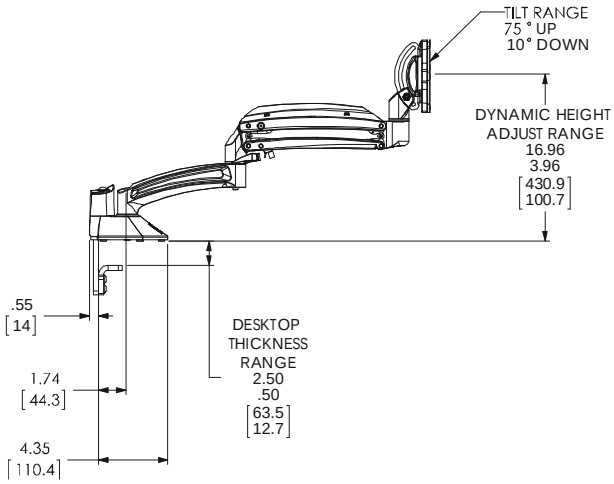

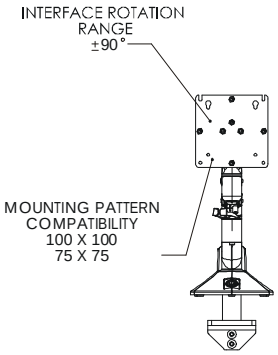

K1D220XXDL

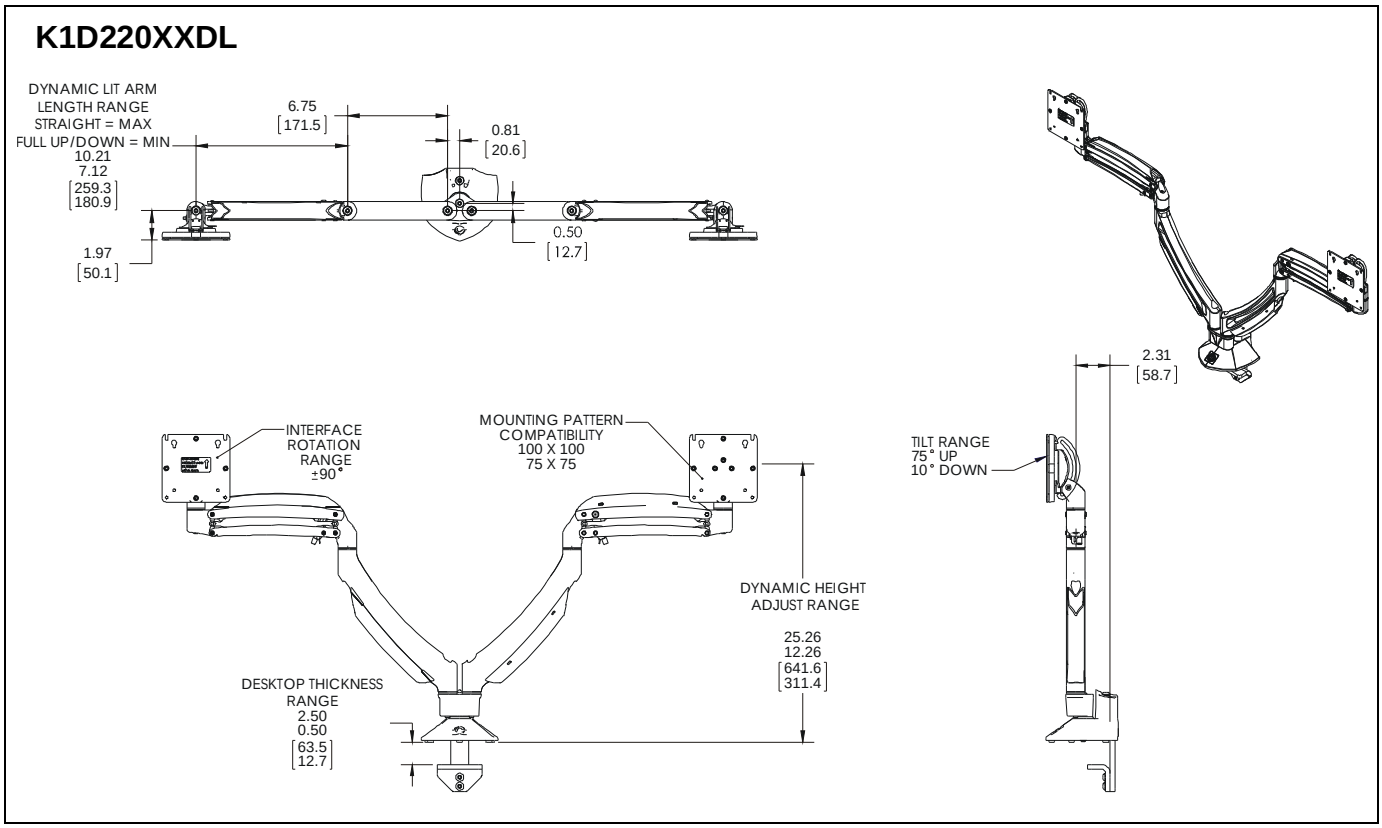

K1D130

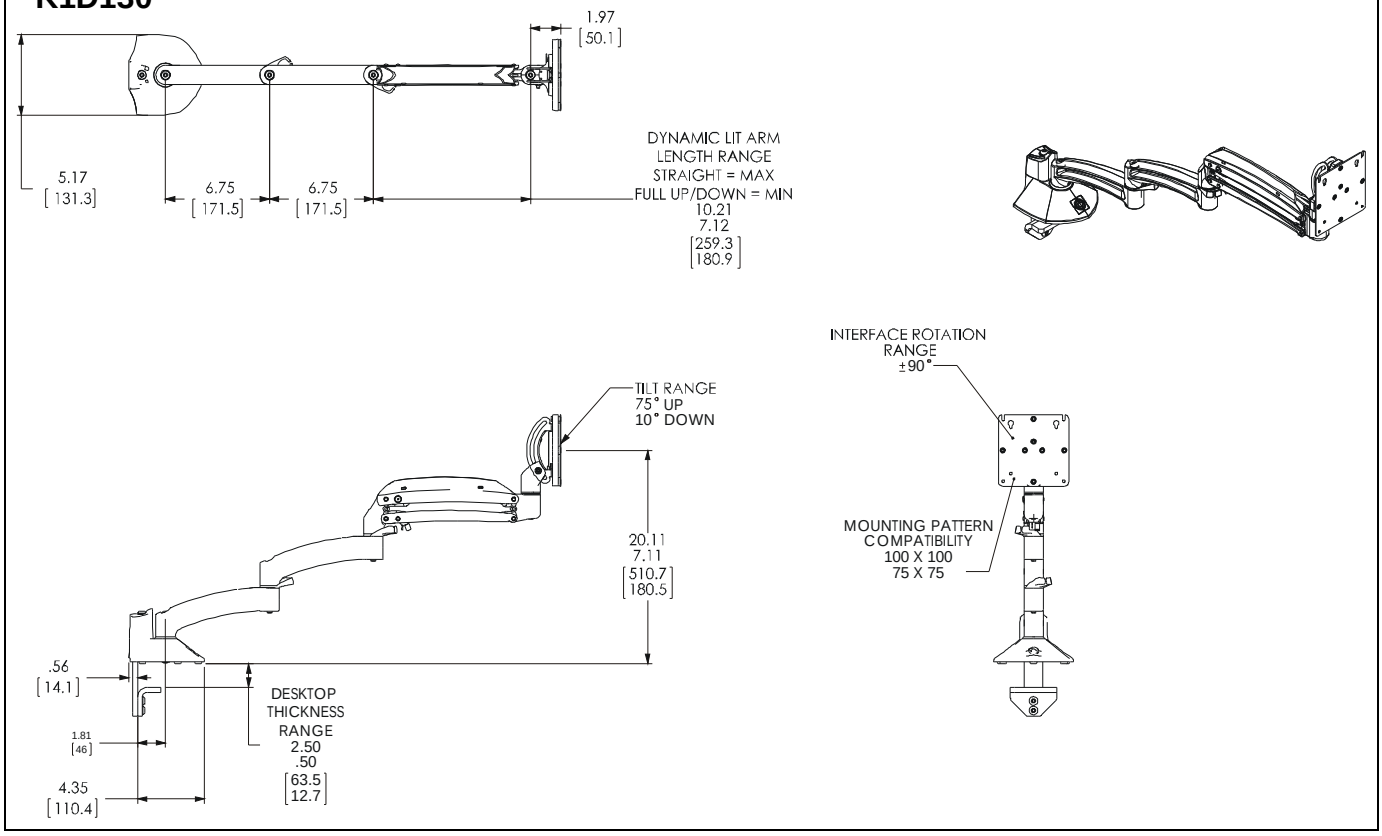

K1D220

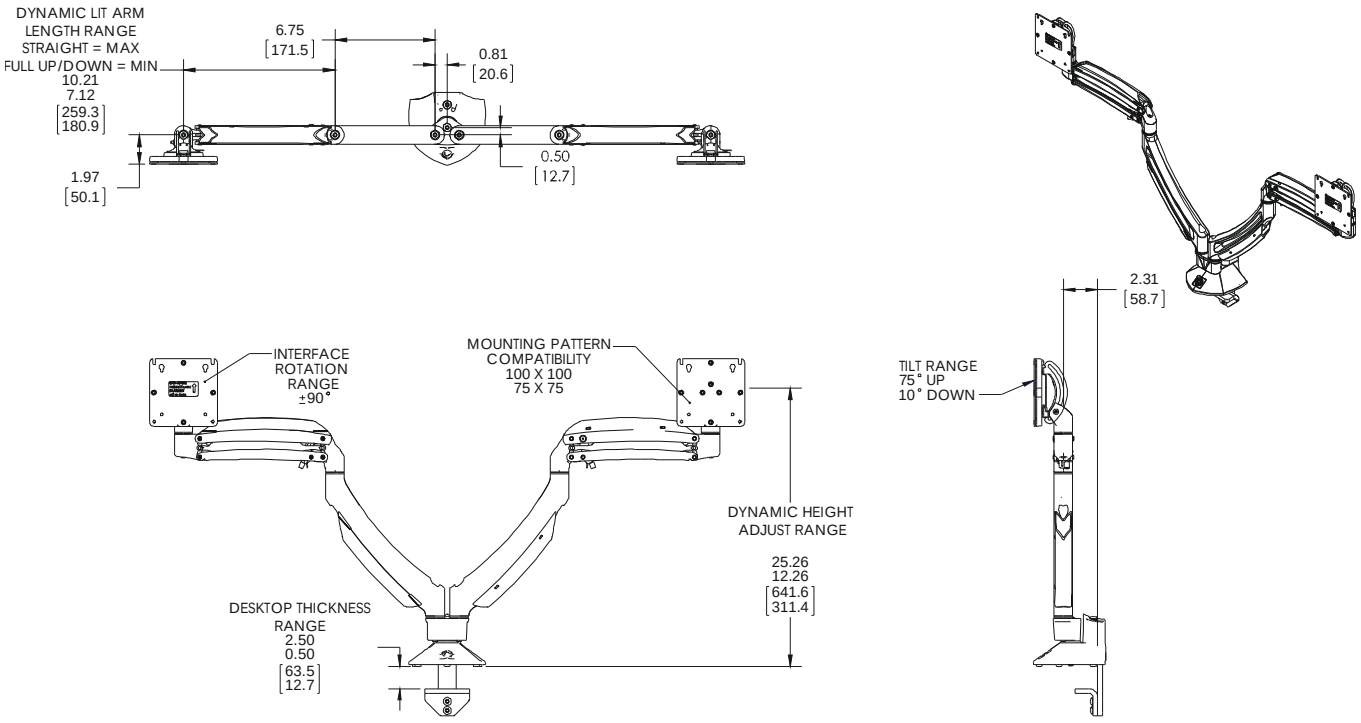

K1D220XRH

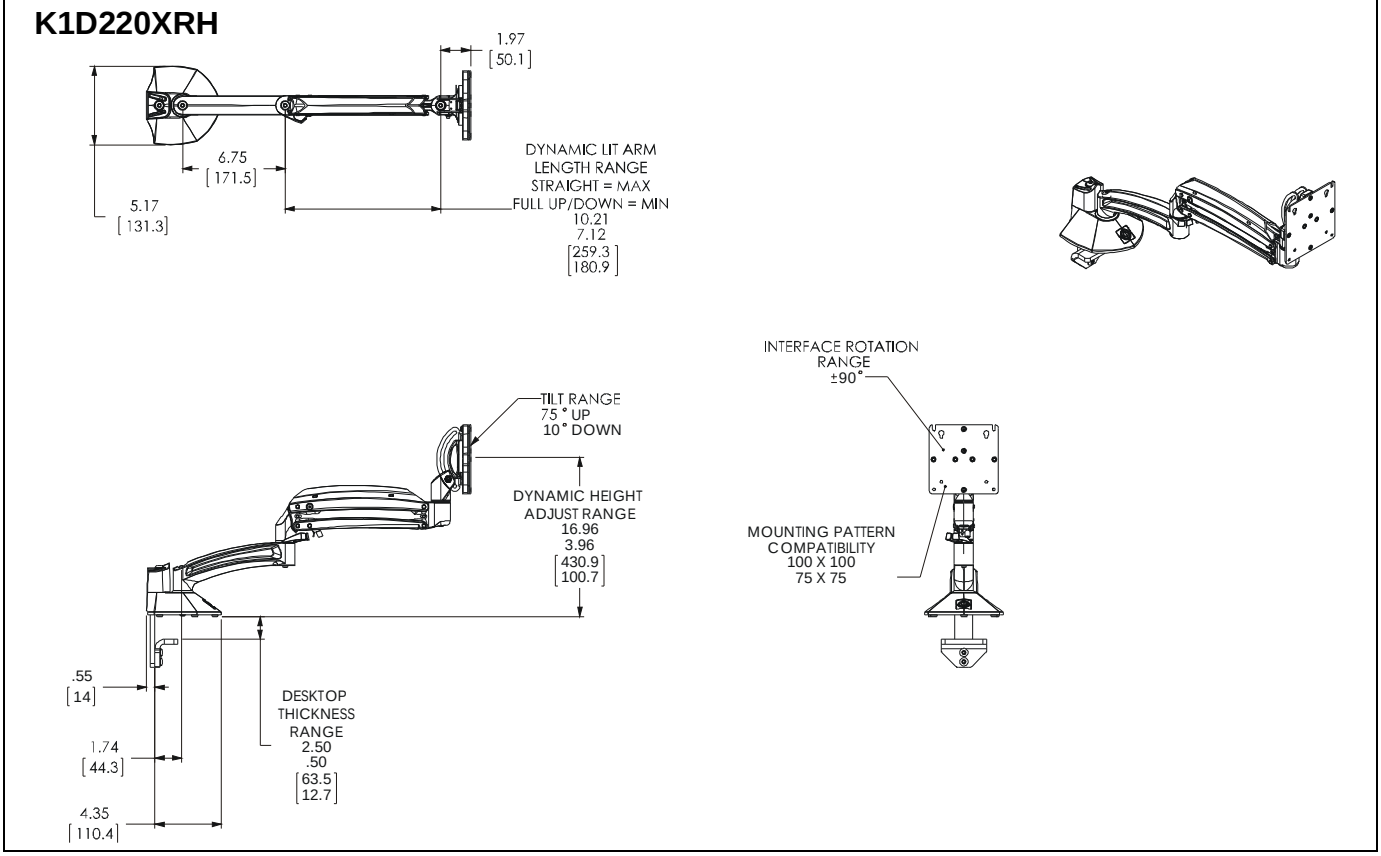

K1D220XXDL

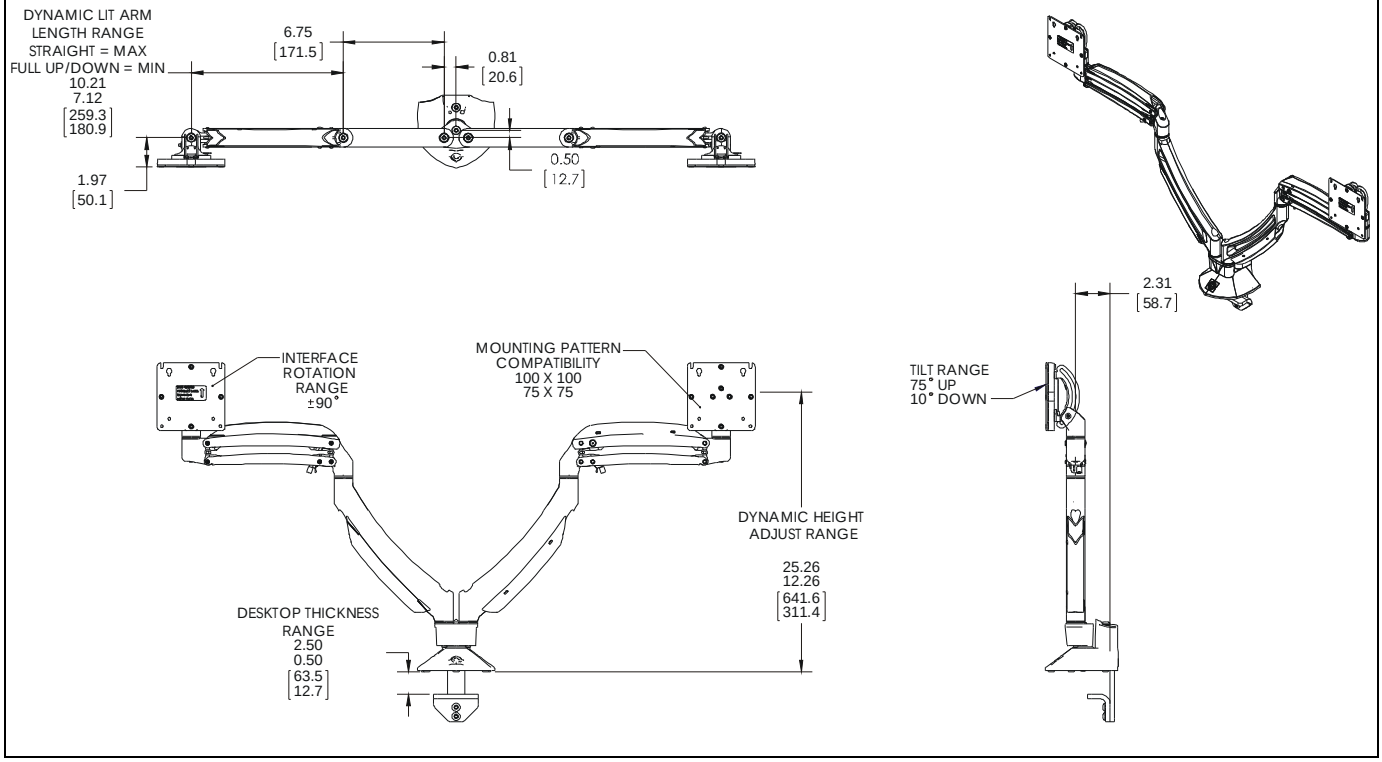

K1D22H

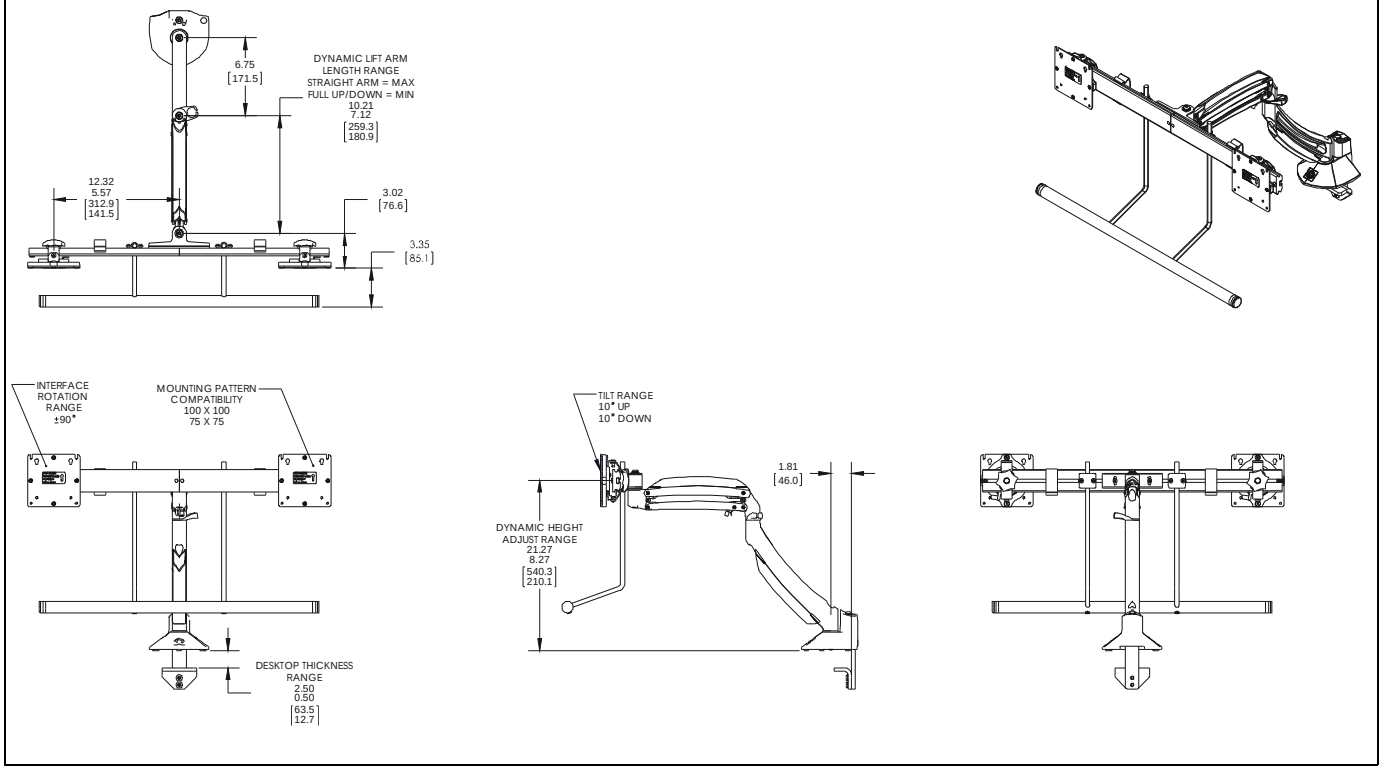

K1D22HXRH

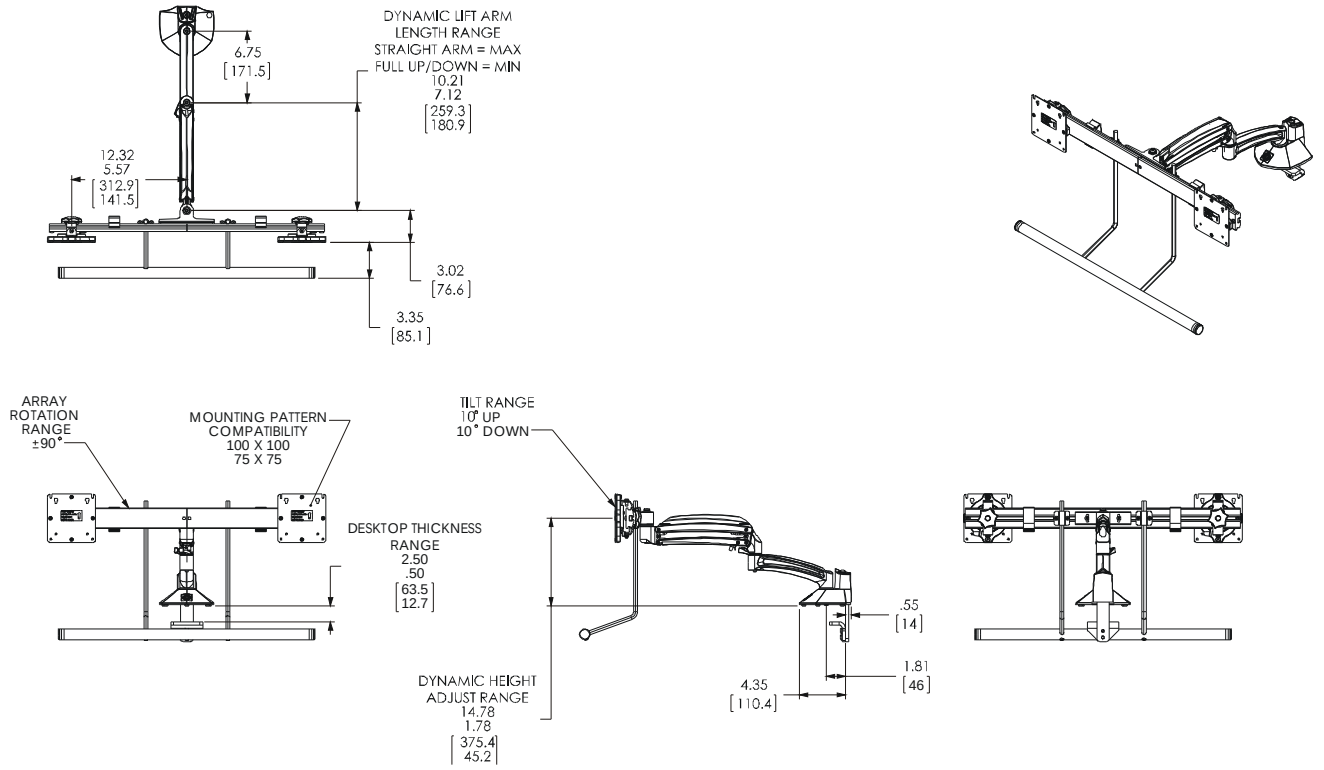

K1D230

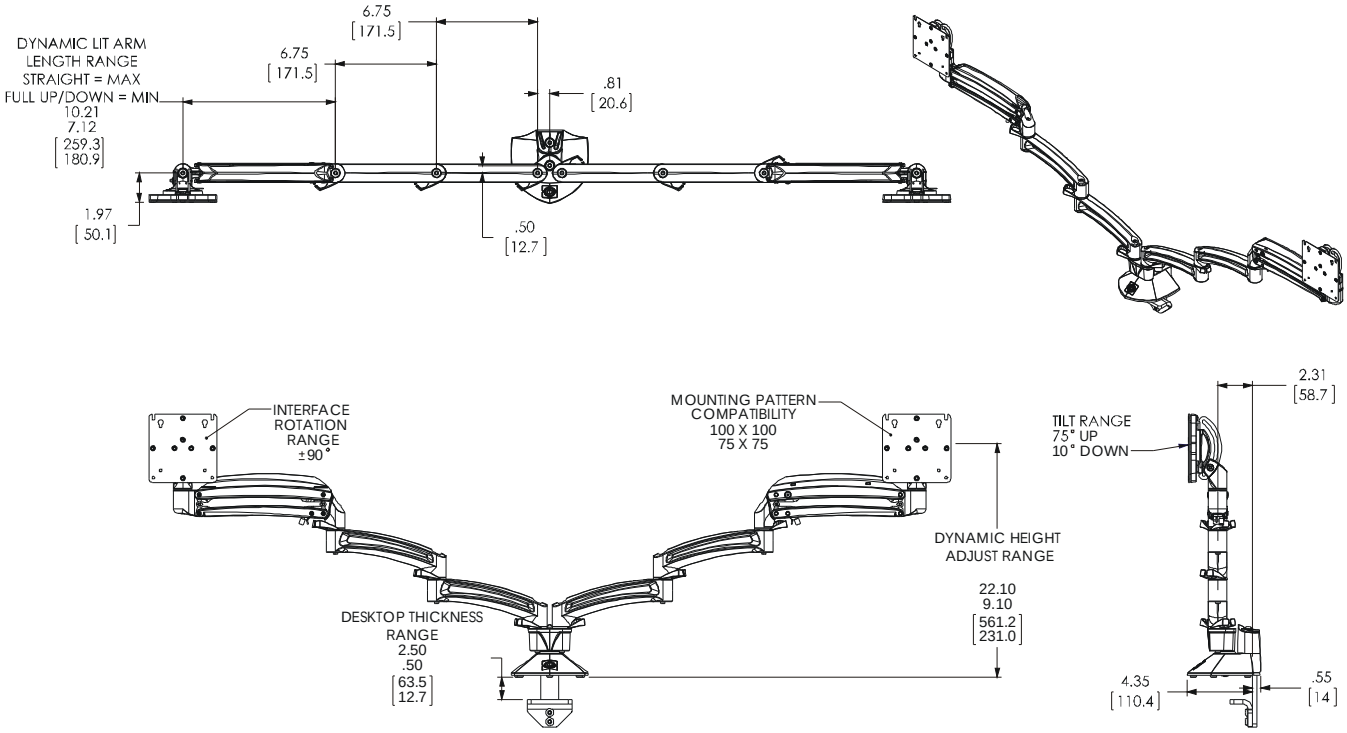

LEGEND

	Tighten Fastener Apretar elemento de fijación Befestigungsteil festziehen Apertar fixador Serrare il fissaggio Bevestiging vastdraaien Serrez les fixations
	Loosen Fastener Aflojar elemento de fijación Befestigungsteil lösen Desapertar fixador Allentare il fissaggio Bevestiging losdraaien Desserrez les fixations
	Phillips Screwdriver Destornillador Phillips Kreuzschlitzschraubendreher Chave de fendas Phillips Cacciavite a stella Kruiskopschroevendraaier Tournevis à pointe cruciforme
	Open-Ended Wrench Llave de boca Gabelschlüssel Chave de bocas Chiave a punte aperte Steeksleutel Clé à fourche
	By Hand A mano Von Hand Com a mão A mano Met de hand À la main
	Hex-Head Wrench Llave de cabeza hexagonal Sechskantschlüssel Chave de cabeça sextavada Chiave esagonale Zeskantsleutel Clé à tête hexagonale
	Pencil Mark Marcar con lápiz Stiftmarkierung Marcar com lápis Segno a matita Potloodmerkteken Marquage au crayon
	Drill Hole Perforar Bohrloch Fazer furo Praticare un foro Gat boren Percez un trou
	Adjust Ajustar Einstellen Ajustar Regolare Afstellen Ajuster
	Remove Quitar Entfernen Remover Rimuovere Verwijderen Retirez
OPT	Optional Opcional Optional Opcional Opzionale Optie En option
	Security Wrench Llave de seguridad Sicherheitsschlüssel Chave de segurança Chiave di sicurezza Veiligheidssleutel Clé de sécurité

TOOLS REQUIRED FOR INSTALLATION

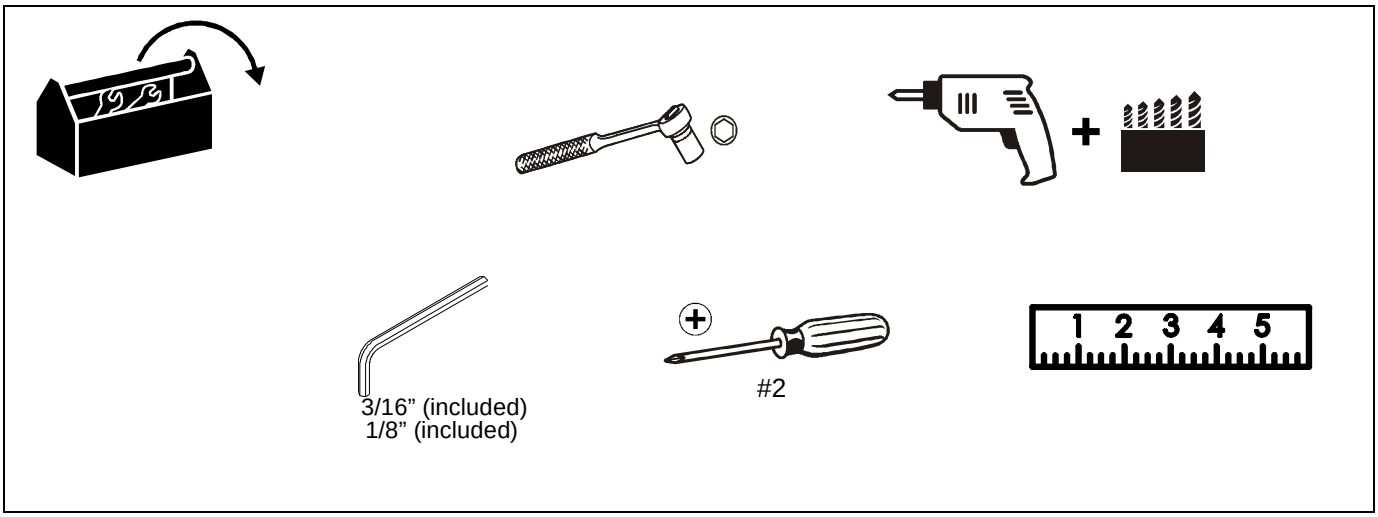

PARTS

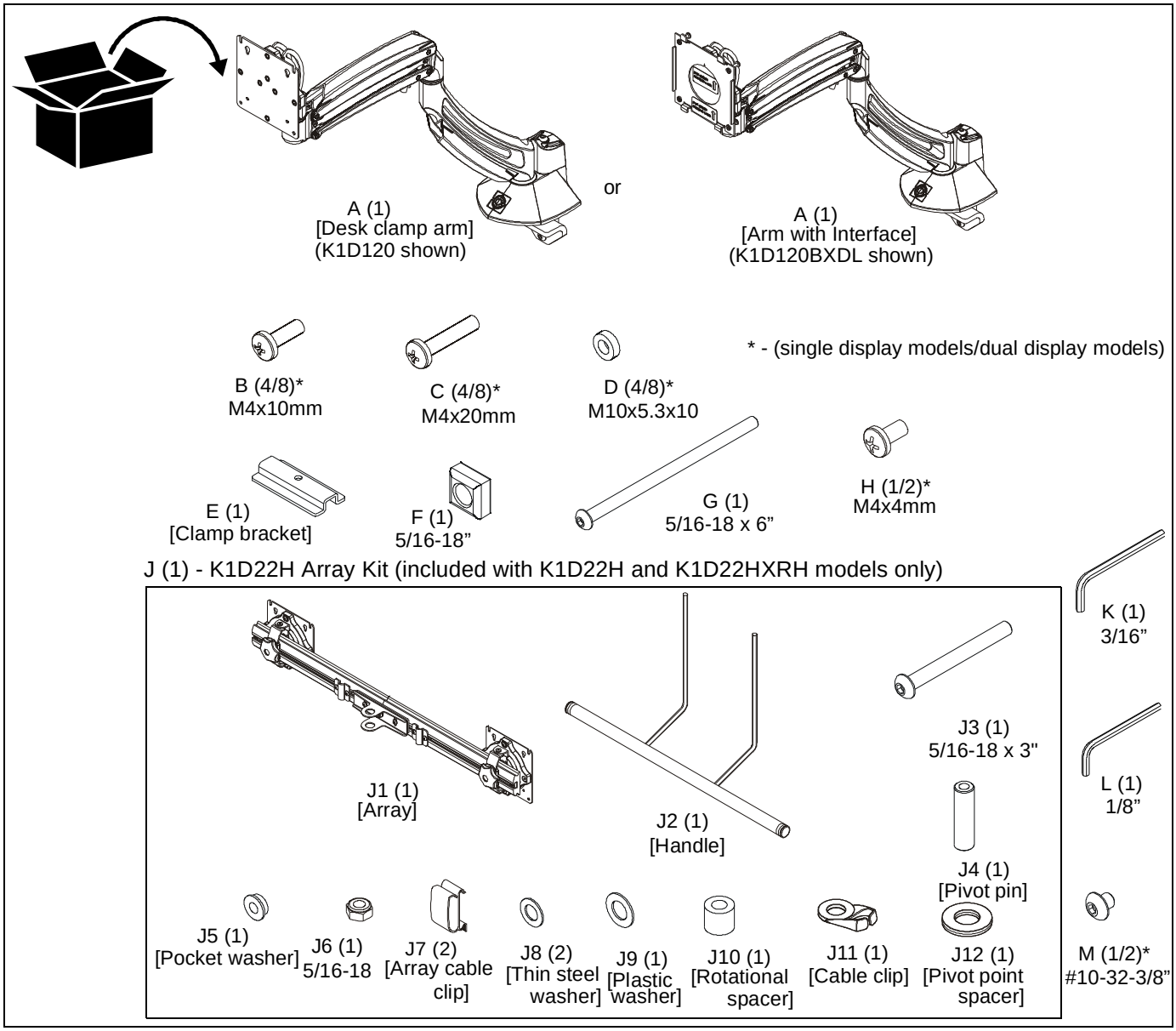

Assembly And Installation

Connecting Desk Clamp Arms to Desk

Standard Installation

1. Loosen clamp screw until enough space is created between clamp and mount to allow for desk mounting. (See Figure 1)

NOTE: If space is limited behind desk (i.e. against wall, etc.), remove lower piece of clamp and two screws holding it to the mount and reattach parts prior to Step 3! (See Figure 2)

2. Place mount on top of desk at desired mounting location. (See Figure 1)
3. Tighten clamp using clamp screw until mount is securely fastened to desk. (See Figure 1)

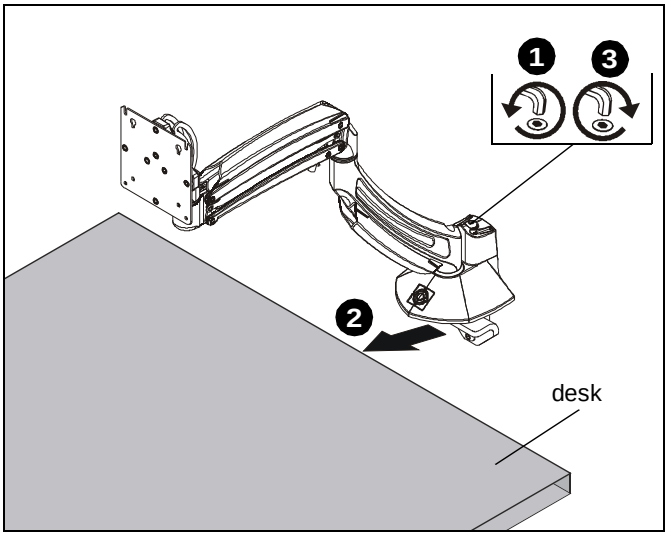

Figure 1

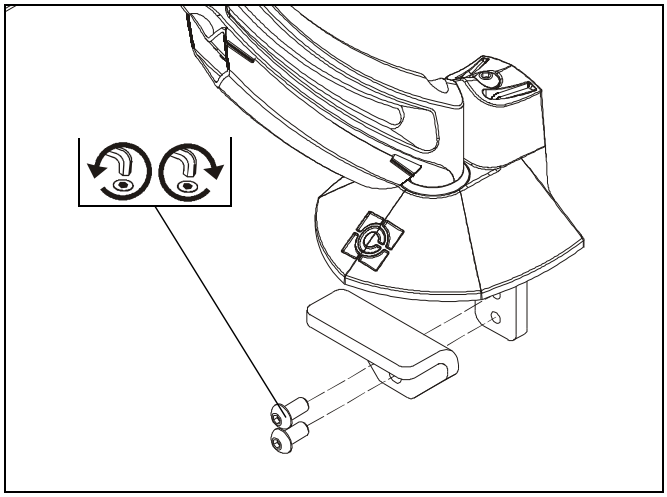

Figure 2

Grommet Hole Option

NOTE: K1D clamp mounts may be installed directly to grommet holes between 1 1/4” and 2 1/2” in diameter. If grommet hardware (E-G) is used, they can be installed to grommet holes between 3/8” and 2 1/2” in diameter.

Direct Installation

1. Remove lower piece of clamp from assembly by removing two button head cap screws holding piece to assembly. (See Figure 3)
2. Install remaining part of clamp through grommet hole. (See Figure 3)

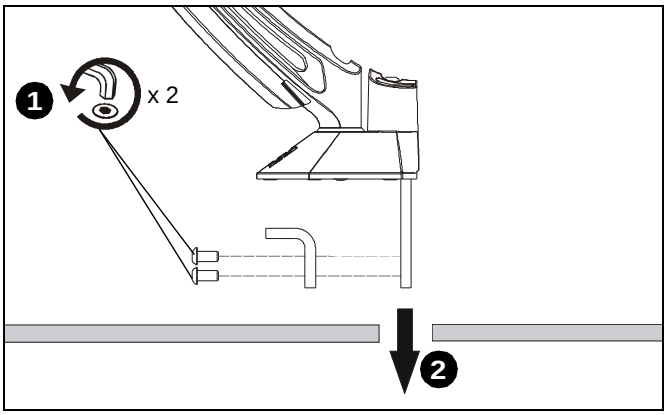

Figure 3

3. Reattach removed piece of clamp and screws to assembly. (See Figure 4)
4. Tighten clamp using clamp screw until mount is securely fastened to desk. (See Figure 4)

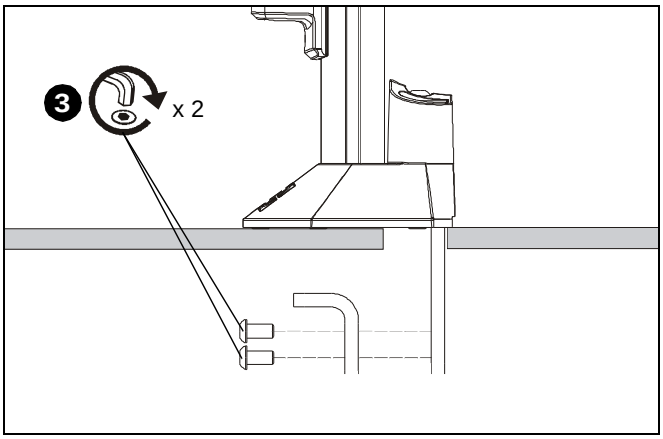

Figure 4

Using Grommet Hardware

1. Remove desk clamp from mount by loosening button head cap screw until clamp is completely disengaged from the bolt. (See Figure 5)
2. Maneuver clamp so that it is totally removed from desk mount. (See Figure 5)

NOTE: Set removed washers aside for re-use.

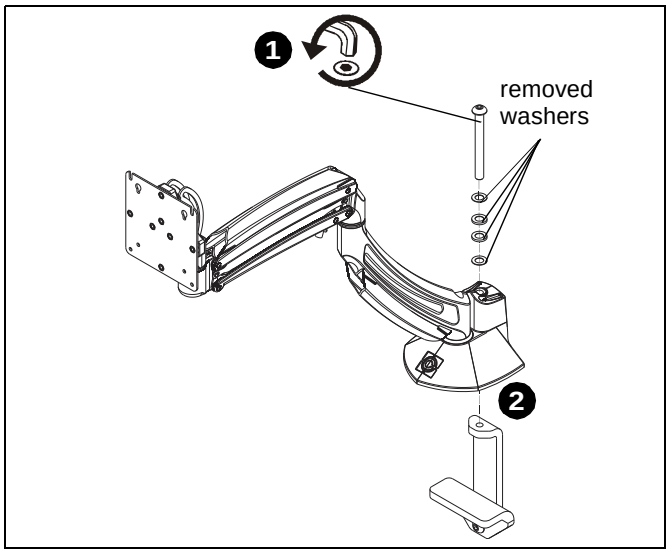

Figure 5

3. Locate a flat surface (thickness of 3/4” minimum to 3 1/2” maximum) on which to mount the desk mount plate.
4. If mounting hole does not already exist on desk, drill 3/8” mounting hole in desk at desired mounting location.

IMPORTANT ! : Mounting hole must be between 3/8” and 2 1/2” in diameter!

5. Place mount on desk over grommet hole. (See Figure 6)
6. Use 5/16-18 x 6” button head cap screw (G), removed washers, clamp bracket (E) and 5/16-18” square nut (F) to secure mount to desk. (See Figure 6)

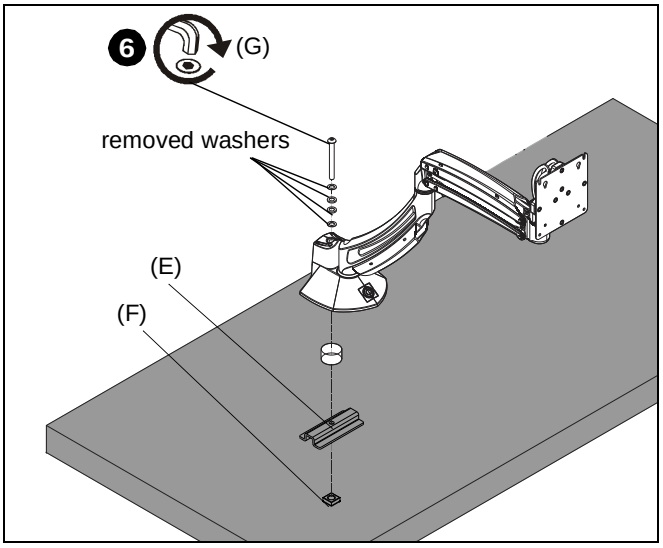

Figure 6

Array Installation (K1D22H and K1D22HXRH ONLY)

1. Slide rotational spacer (J10) into opening on array attachment bracket. (See Figure 7)
2. Use 5/16-18 x 3" button head cap screw (J3), two thin steel washers (J8), plastic washer (J9), pocket washer (J5), pivot pin (J4), pivot point spacer (J12) and 5/16-18 lock nut (J6) to secure array (J1) to K1D arm (A). (See Figure 7)

NOTE: Cable clip (J11) can be used in place of pivot point spacer (J12) if additional cable management is desired. (See Figure 7)

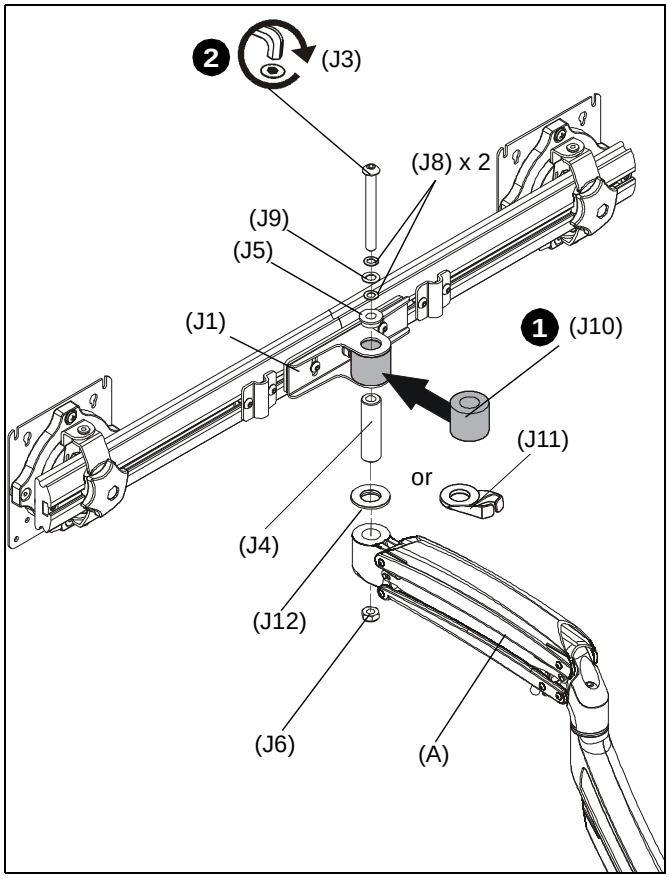

Figure 7

Display Installation - Standard Faceplate

NOTE: If installing mount that includes custom faceplate (K1D120XXDL or K1D220XXDL), proceed to Display Installation - Custom Faceplate Section.

1. Remove quick release faceplate from mount by pulling quick release lever and sliding faceplate off mount. (See Figure 8)

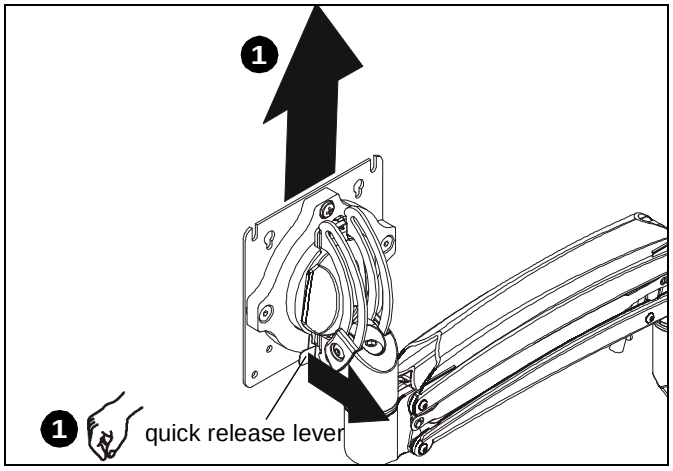

Figure 8

WARNING: Exceeding the weight capacity can result in serious personal injury or damage to equipment! It is the installer's responsibility to make sure the combined weight of all components attached to the K1D Series Monitor Arm up to (and including) the display does not exceed the weight limits listed below. Use with products heavier than the maximum weight indicated may result in collapse of the mount and its accessories causing possible injury.

MODEL	Max Weight Allowed for EACH Display	Max Weight Capacity of Mounting System
K1D120	25 lbs (11.34 kg)	25 lbs (11.34 kg)
K1D120XRH	25 lbs (11.34 kg)	25 lbs (11.34 kg)
K1D120XXDL	25 lbs (11.34 kg)	25 lbs (11.34 kg)
K1D130	10 lbs (4.54 kg)	10 lbs (4.54 kg)
K1D220	25 lbs (11.34 kg)	50 lbs (22.68 kg)
K1D220XRH	25 lbs (11.34 kg)	50 lbs (22.68 kg)
K1D220XXDL	25 lbs (11.34 kg)	50 lbs (22.68 kg)
K1D22H	9 lbs (4.08 kg)	18 lbs (8.16 kg)
K1D22HXRH	9 lbs (4.08 kg)	18 lbs (8.16 kg)
K1D230	10 lbs (4.54 kg)	20 lbs (9.07 kg)

2. Carefully place display face down on protective surface.
3. Connect faceplate to display

   For flush mounting hole installation:

   - Using Phillips screwdriver, carefully install four M4x10mm screws (B) through corresponding holes on faceplate and into the mounting holes on the display. (See Figure 9)

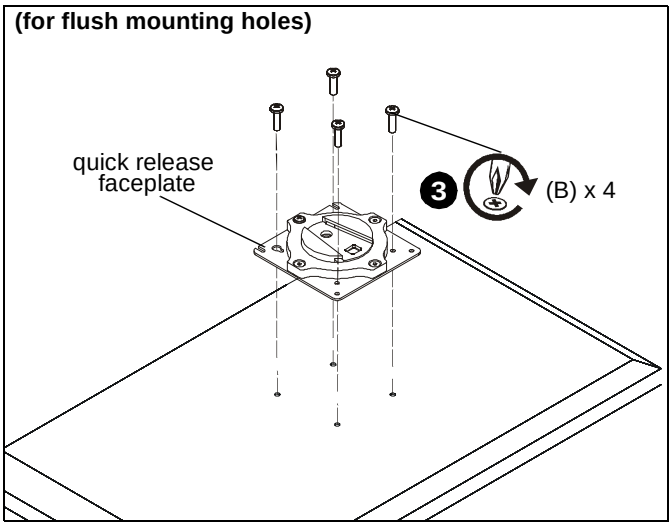

Figure 9

For recessed mounting hole installation:

- Place four spacers (D) on top of mounting holes on back of display. (See Figure 10)
- Using Phillips screwdriver, carefully install four M4x20mm screws (C) through corresponding holes on faceplate, spacers (D) and into the mounting holes on the display. (See Figure 10)

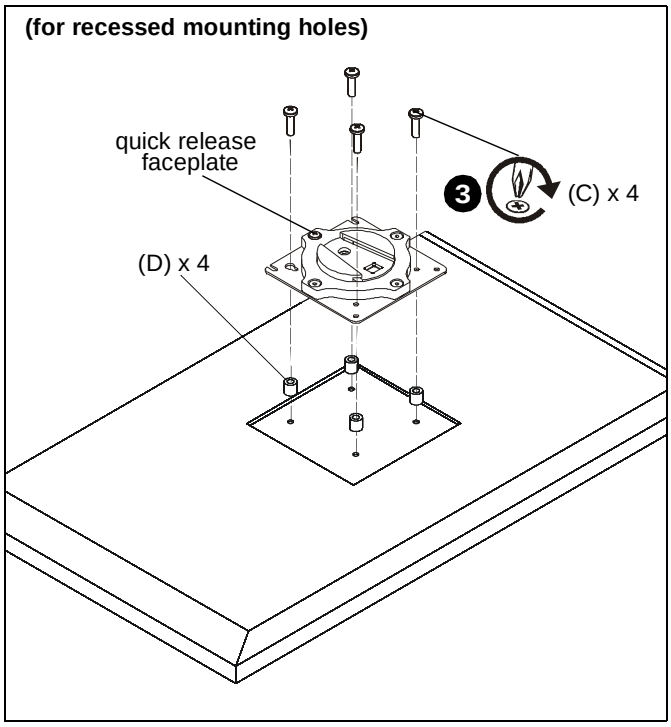

Figure 10

4. Position display with faceplate attached above mount. (See Figure 11)
5. Slide faceplate onto mounting head until quick release tab clicks into place. (See Figure 11)

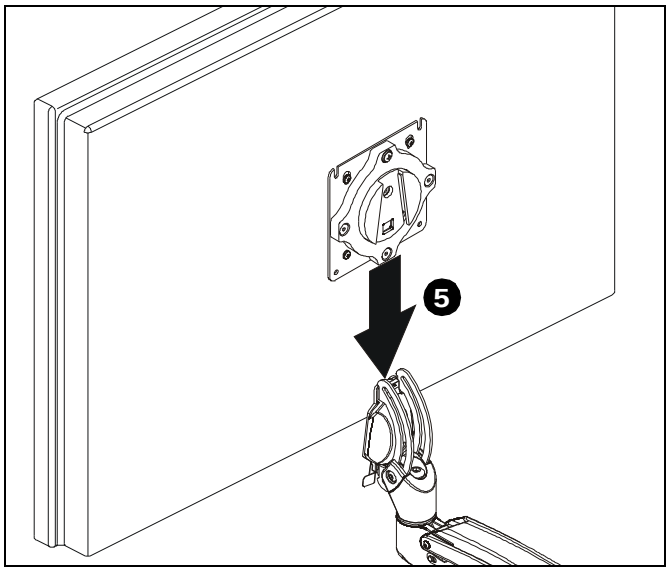

Figure 11

Display Installation - Custom Faceplate

IMPORTANT ! : Custom interface brackets are designed specifically for Dell's quick-connect style monitors. Do not attempt to install any other type of monitors to these mounts!

1. Position monitor over mounting tabs on quick-connect bracket (A). (See Figure 12)
2. Lower monitor onto quick-connect bracket, inserting mounting tabs into top two top mounting holes on back of monitor. (See Figure 12)

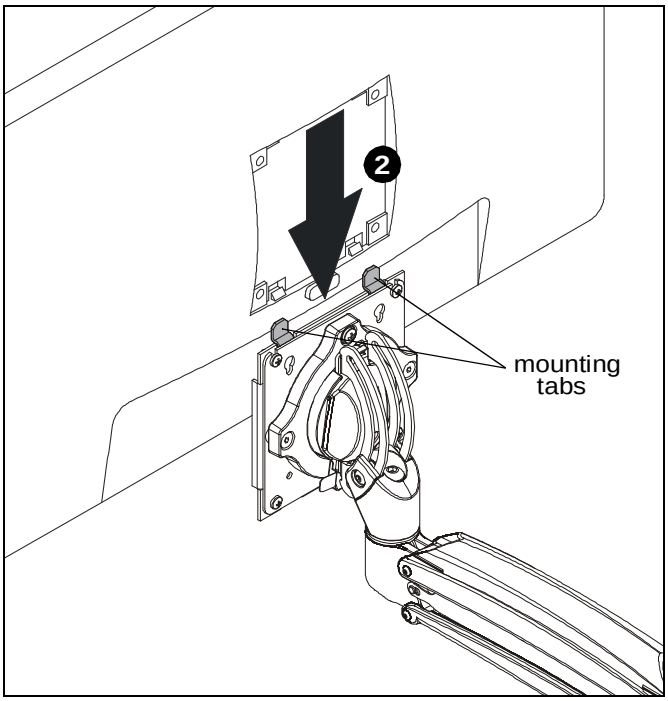

Figure 12

3. Slide base of monitor towards mount until lower tabs secure display to mount. An audible "click" should be heard. (See Figure 13)

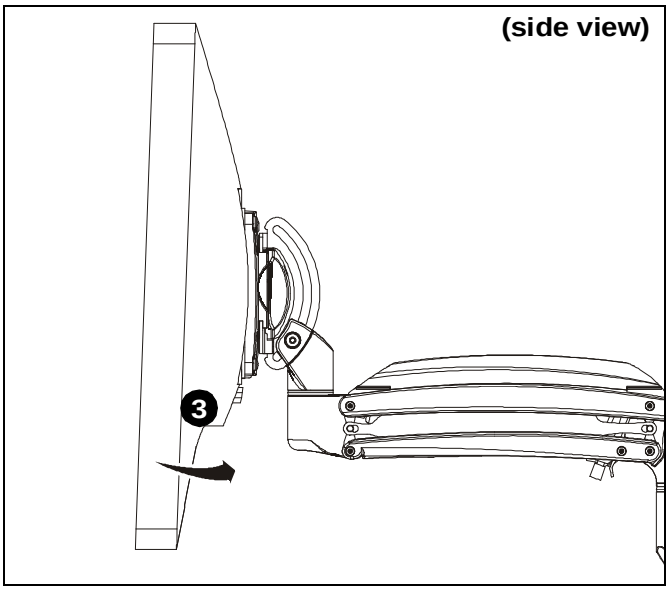

Figure 13

Handle Installation (K1D22H models only)

1. Loosen four screws securing handle brackets to K1D22H array. (See Figure 14)
2. Install uprights of handle (J2) into handle brackets located on the back of K1D22H array. (See Figure 14)

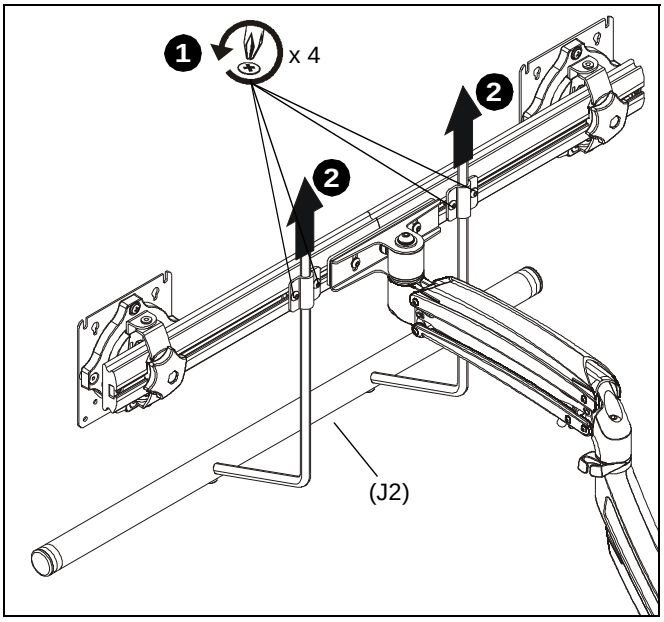

Figure 14

3. Position handle (J2) at desired height and secure by tightening button head cap screws attaching handle brackets to array. (See Figure 15)

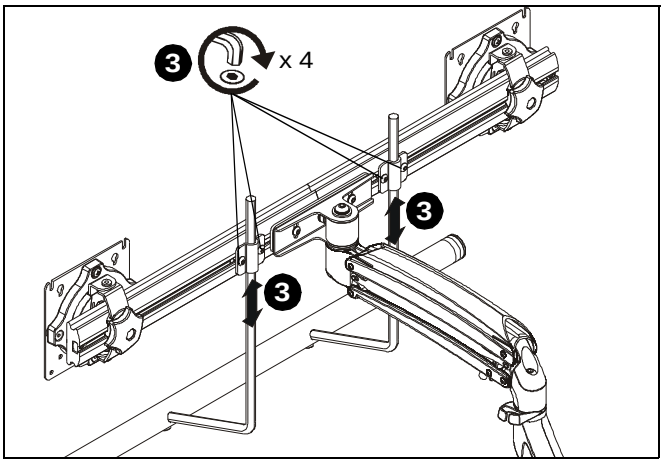

Figure 15

Adjustments

Pitch Adjustment (non-array models)

1. Adjust pitch to desired tilt position. (See Figure 16)
2. Adjust pitch tension screw to change the adjustment tension. (See Figure 16)

Pivot Adjustment (non-array models)

3. Adjust pivot position as desired. (See Figure 16)
4. Use 3/16” hex key (K) to adjust pivot point tension screws to change pivot adjustment tension. (See Figure 16)

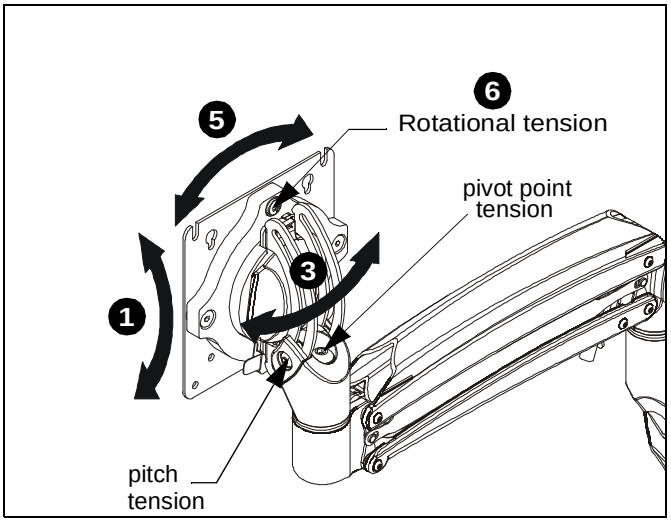

Figure 16

Rotational Adjustment

NOTE: (Optional) Rotational adjustment may be locked by installing rotational locking screw (M) into back of faceplate. (See Figure 17)

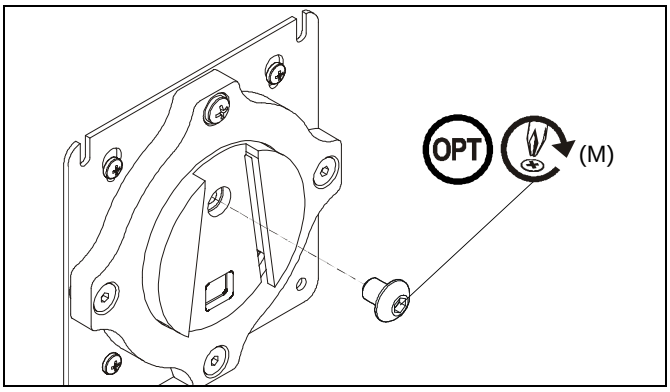

Figure 17

5. The monitor may be adjusted 90 degrees in either direction in order to provide a portrait view of the monitor. (See Figure 16)
6. Use a Phillips screwdriver to adjust rotational adjustment screw to adjust rotational tension. (See Figure 16)

Lift Arm Tension Adjustment

1. Tension may be adjusted with tension adjustment screw inside cable management cover and 1/8” hex key (L). (See Figure 18)

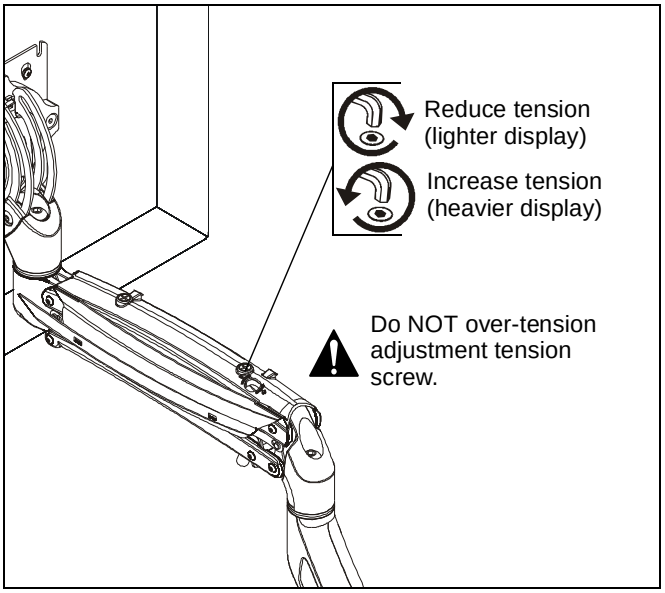

Figure 18

Adjustments - K1D22H models only

Display Adjustments

1. Loosen knobs securing faceplates to array. (See Figure 19)
2. Slide displays laterally on array to adjust lateral shift. (See Figure 19)
3. Adjust pitch and pivot position as desired. (See Figure 19)
4. Tighten knobs to secure faceplates in position. (See Figure 19)

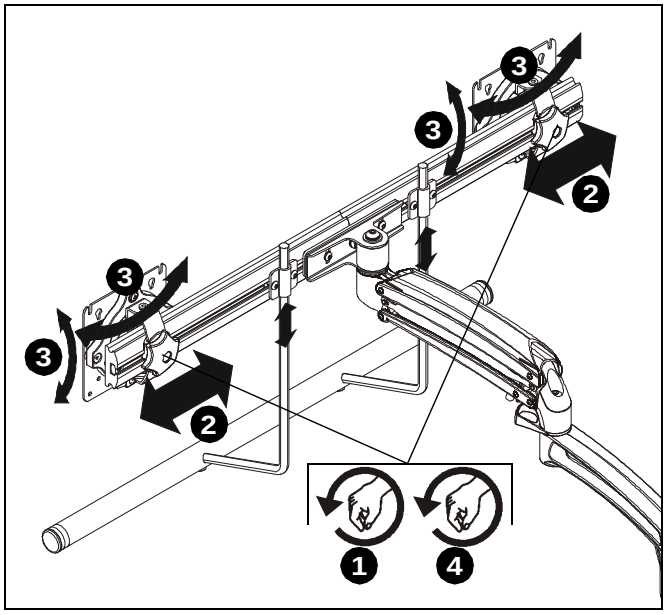

Figure 19

Array Bar Roll Adjustment

1. Loosen roll adjustment screws on back of array bracket. (See Figure 20)
2. Adjust roll of array bar as desired. (See Figure 20)
3. Tighten roll adjustment screws on back of array bracket. (See Figure 20)

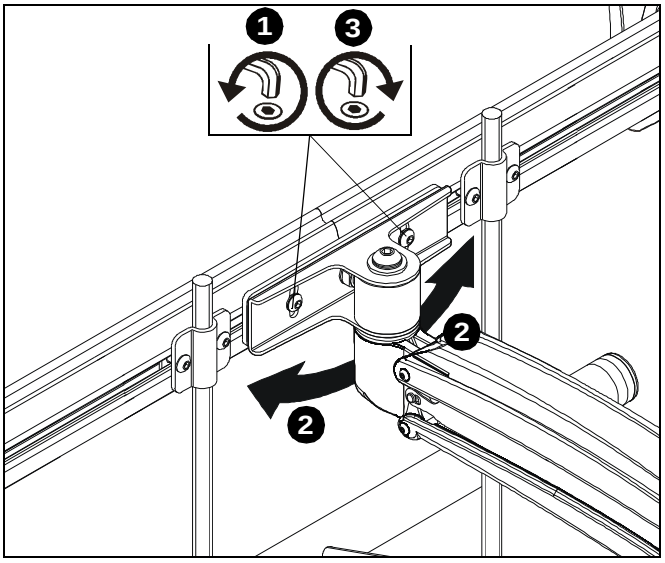

Figure 20

Display Removal

WARNING: Only remove display from mount when the display can be lifted up from the mount! DO NOT remove display unless the display is in the upright position! (See Figure 21)

1. Make sure display is in the upright position.
2. Remove quick release faceplate from mount by pulling quick release lever and sliding faceplate off mount. (See Figure 21)

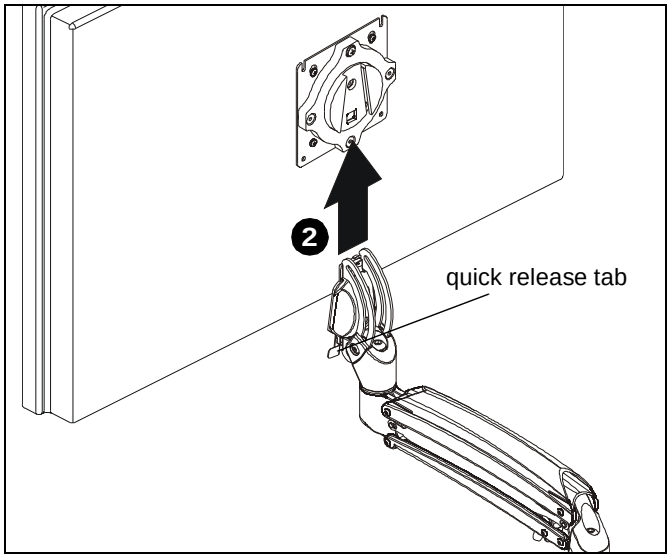

Figure 21

Display Removal Security Screw

NOTE: In order to prevent display from being easily removed from mount using the quick release lever, install M4x4mm security screw (M) into lower hole on back of faceplate. (See Figure 22)

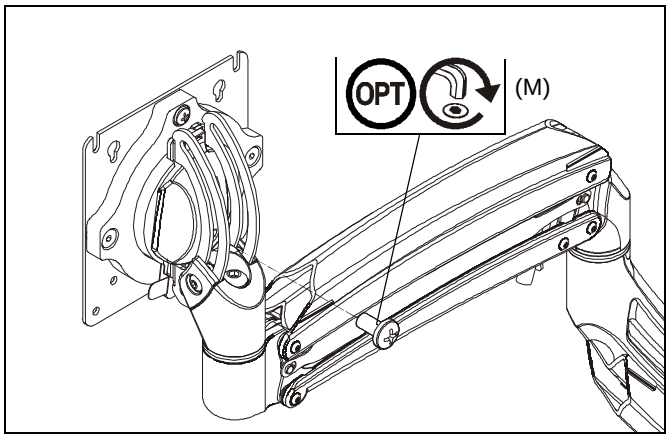

Figure 22

Pivot Adjustment Range

Single Arm Models

1. Adjust arm angle as desired up to 90 degrees in either direction. (See Figure 23)

WARNING: Swinging the arm beyond 90 degrees may result in the mount slipping off the desk causing serious injury!

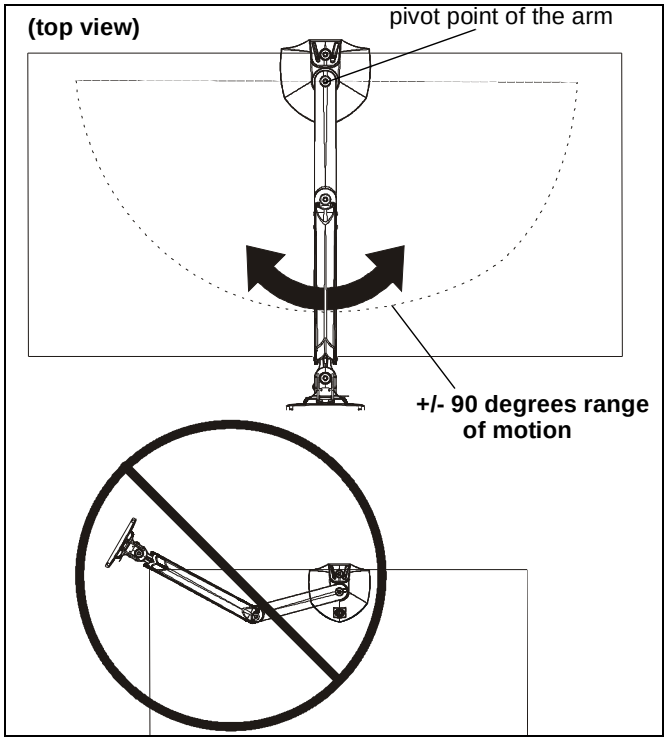

Figure 23

Dual Arm Models

1. Adjust arm angles as desired within a 90 degree range from the pivot point of the arm and a perpendicular centerline of mount. (See Figure 24)

WARNING: Swinging the arm beyond this range may result in the mount slipping of the desk causing serious injury!

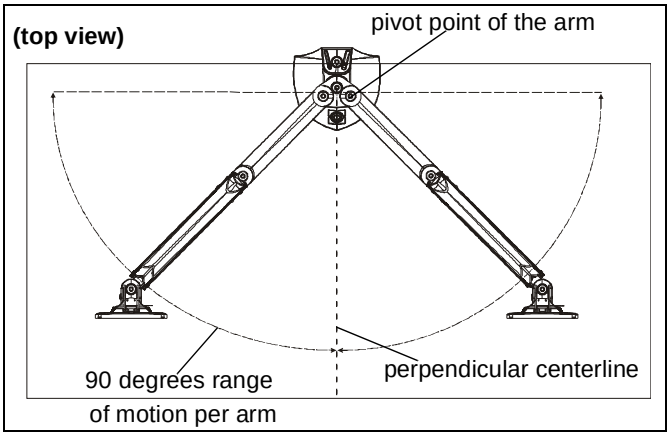

Figure 24

Cable Management

1. Press insides of cable management covers at both ends to unhinge tabs on either end of cable management cover on upper arm. (See Figure 25)
2. Lift cable management cover up until tabs are unhinged and cover is in the “open” position. (See Figure 25) and (See Figure 26)

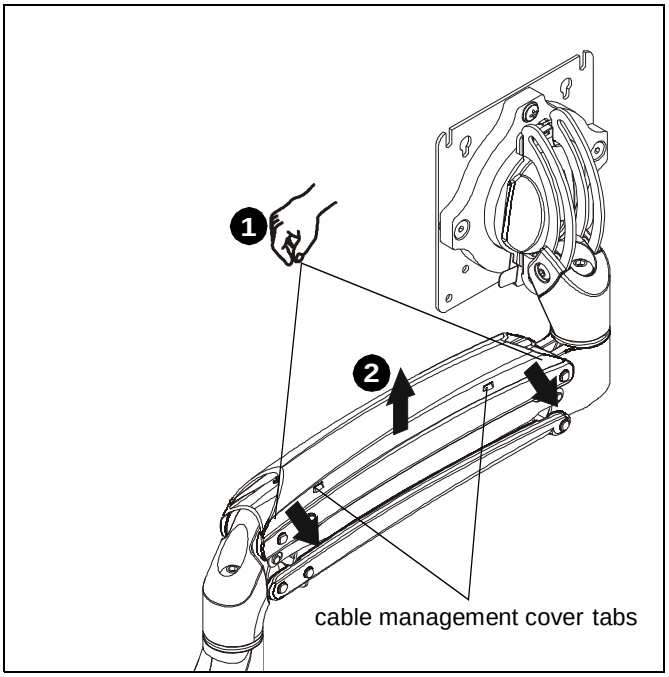

Figure 25

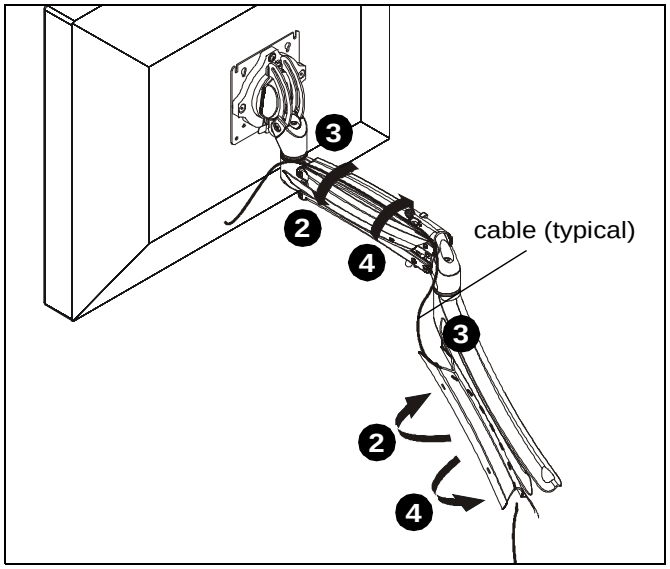

Figure 26

3. Route cables through cable management channels. (See Figure 26)

IMPORTANT ! : Be sure to leave enough slack in the cables near display and arm joint to allow for full arm articulation!

4. Close cable management covers on monitor arm. (See Figure 26)
5. Repeat Steps 1-4 for lower arm.

Array Models

1. Install array cable clips (J7) to back of array. (See Figure 27)
2. Route cables through array cable clips (J7) as desired. (See Figure 27)
3. Route cables through arm cable clips as desired. (See Figure 27)

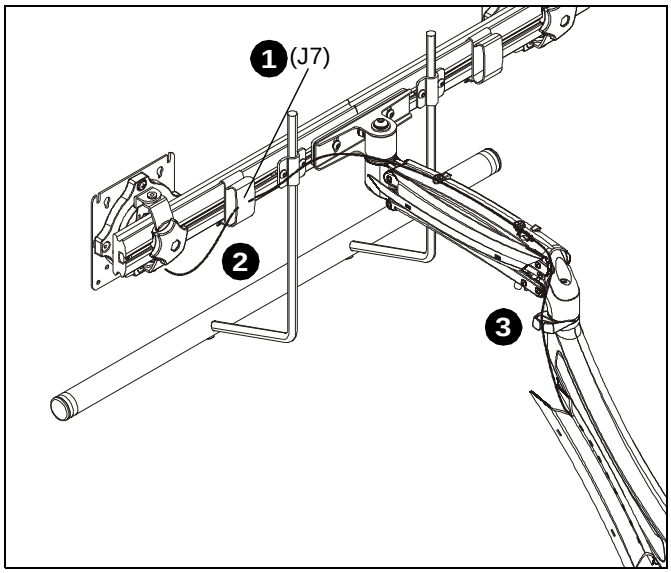

Figure 27

Our Mounts. **Your Vision.**

Chief, a products division of
Milestone AV Technologies

8800-002758 Rev00
©2016 Milestone AV Technologies
www.milestone.com
09/16

USA/International
A 6436 City West Parkway, Eden Prairie, MN 55344
P 800.582.6480 / 952.225.6000
F 877.894.6918 / 952.894.6918

Europe
A Franklinstraat 14, 6003 DK Weert, Netherlands
P +31 (0) 495 580 852
F +31 (0) 495 580 845

Asia Pacific
A Office No. 918 on 9/F, Shatin Galleria
18-24 Shan Mei Street
Fotan, Shatin, Hong Kong
P 852 2145 4099
F 852 2145 4477

30% POST-CONSUMER CONTENT